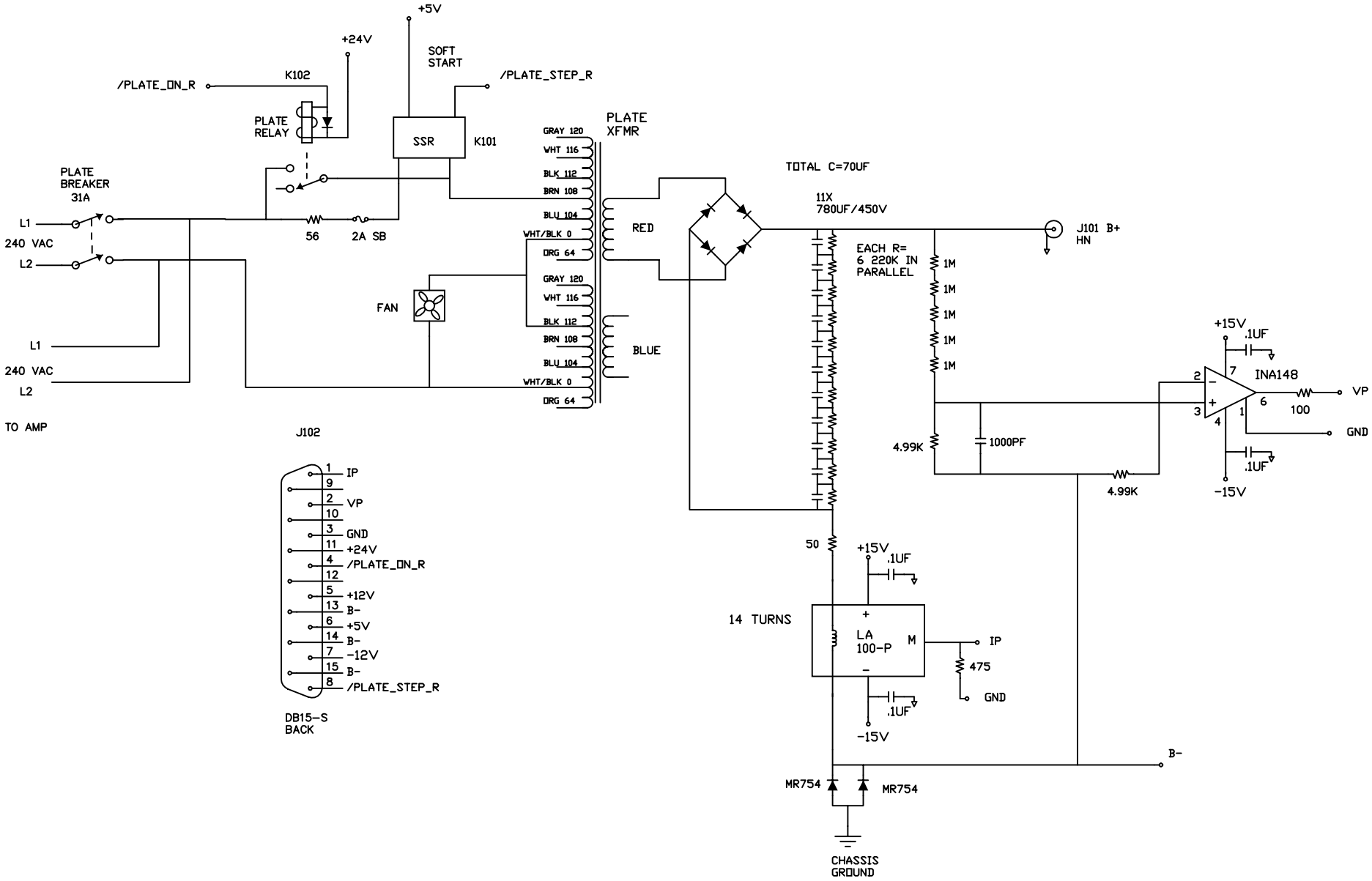

TOLERANCES	SCALE 1-1	DO NOT SCALE	FINISH	DRAWN BY DATE 22 JUNE 2004	
	MATERIAL			CHECKED BY DATE	
TITLE HV POWER SUPPLY			DWG SZ A	SHEET 1 OF 1	DRAWING NUMBER HVPS SCH.DWG	REV